DWG. NO.	SHEET	REV
10-A-FFA-XX	1	A

REVISIONS			
REV	DESCRIPTION	DATE	APPROVED
A	CONVERT TO BTG FORMAT	12-1-06	

SPECIFICATIONS:

10 WATT BI-DIRECTIONAL COAXIAL ATTENUATOR

POWER RATING: 10 WATTS MAXIMUM @ 40°C.
12 WATTS MAXIMUM @ 25°C.

CONNECTORS: SMA FEMALE, PASSIVATED STAINLESS STEEL

FREQUENCY RANGE & VSWR: DC TO 1GHz AT 1.10:1 MAX.
1GHz TO 4GHz AT 1.25:1 MAX.

IMPEDANCE: 50 OHMS, NOMINAL

AMBIENT TEMPERATURE RANGE: -40°C TO +40°C

OPERATING POSITION: ANY

FINISH: BLACK ANODIZED COOLING FINS

NOMINAL SIZE: 2.02"L X 2.30" DIA.

WEIGHT: APPROX. 5 OZ.

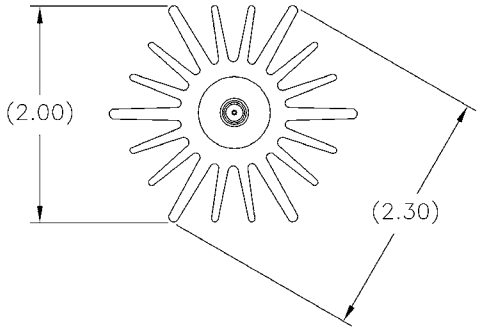

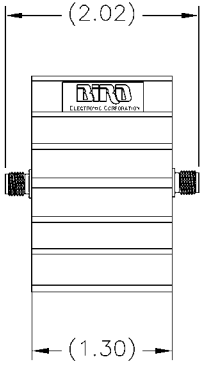

NOTE:
FOR VALUES NOT LISTED, REFER TO THE NEXT HIGHER ATTENUATION LEVEL FOR SPECIFICATIONS. FOR ATTENUATION VALUES GREATER THAN THE HIGHEST LISTED ATTENUATION VALUE, REFER TO THE VALUE 1/2 THE DESIRED ATTENUATION LEVEL, THEN DOUBLE THE LISTED SPECIFICATION VALUES, UNLESS OTHERWISE SPECIFIED.

XX = DASH NUMBER (dB VALUE)

DASH NO.	dB ATTEN.	DC – 1GHz ATTENUATOR ACCURACY ±dB	1 – 4GHz ATTENUATOR ACCURACY ±dB
-30	30	±0.8 dB	±1.3 dB
-20	20	±0.5 dB	±1.0 dB
-10	10	±0.4 dB	±0.8 dB
-06	6	±0.4 dB	±0.6 dB
-03	3	±0.3 dB	±0.5 dB
-02	2	±0.3 dB	±0.5 dB
-01	1	±0.3 dB	±0.5 dB

DIMENSIONS HEREON ARE FOR CUSTOMER CONVENIENCE AND REFERENCE ONLY. TOLERANCE TO BE APPLIED ONLY WHERE INDIVIDUALLY STATED ON THE RESPECTIVE DIMENSION. **-DO NOT SCALE DRAWING-**

UNLESS OTHERWISE SPECIFIED DIMENSIONS ARE IN INCHES
TOLERANCES ARE:
FRACTIONS ±1/64 DECIMALS .XX= ±.010 .XXX= ±.005
ANGLES ±30' MILLIMETERS .X= ±.4 .XX= ±.12
DO NOT SCALE DRAWING

THIS DRAWING IS THE PROPERTY OF THE BIRD TECHNOLOGIES GROUP OR BIRD ELECTRONIC CORPORATION. THE DESIGNS AND SPECIFICATIONS DISCLOSED HEREIN ARE PROPRIETARY AND SHALL NOT BE REPRODUCED, NOR COPIED, NOR USED AS THE BASIS FOR THE MANUFACTURE OR SALE OF APPARATUS OR DEVICES WITHOUT THEIR EXPRESS WRITTEN CONSENT.

APPROVALS		DATE
DRN	DMD	12-1-06
CHK	DMD	12-1-06
APP	DMD	12-1-06

MATERIAL CODE

FINISH CODE

BIRD TECHNOLOGIES GROUP ELECTRONIC CORPORATION

TITLE
ATTENUATOR, SMA FEMALE/FEMALE, 10W

B	FSCM NO. 70998	SCALE 1:1	DWG. NO. 10-A-FFA-XX	REV A
PROJ./LIB AUTOCAD			COMM CODE AT1	SHEET 1 OF 1